Mahindra
Rise.

Construction Equipment

Mahindra ROADMASTER G75

▪ Performance ▪ Quality ▪ Customer Focus ▪ Prosperity

Optimized Solution for the Developing World

Road Infrastructure & Current Motor Graders in India vs the Developed Countries

	MULTILANE EXPRESSWAY	SH/NH	MDR/ODR	VR	UNSURFACED
					
Developed Countries	60%		30%	10%	
India (km)	6% (2,56,749)		36% (17,05,706)	58% (27,49,805)	

In India 139 km of Rural Roads are built/upgraded every day against 25 km of NH/SH

- Motor Graders in India are dominated by imports & foreign manufacturers
- Models being sold are made for the developed world
- Too large and hence grossly underutilized
- Too expensive and hence non-viable for most road projects
- Resulting in very low sales volume inspite of the large quantum of road work

Conventional motor graders have optimal utilization only for development of 6% roads in India

Indian Road Construction Scenario & Contractor Issues

Road Construction Scenario

Labour Intense

Suboptimal Methods

Miss fit Machinery

Absence of tailor made equipment leads to sub-optimal methods with limited mechanization and large labour force deployment resulting in following major contractor issues:

Contractor Issues

Availability & Control of Labour in Large Numbers

Quality of Roads

Speed of Road Making

Made For India by India

- Study of rural roads and infrastructure in India conducted over a year
- 500+ customers, road contractors and other eco system entities interacted across 13 states
- 20,000+ man days of product development
- 6,000+ hours of extensive testing in different location across India in various applications
- Designed by 5,000+ strong Mahindra R&D team
- Made in Mahindra's world class Chakan plant
- Robotic welding for key structural components

Affordable Uncompromised Mechanization

Performance

- Powerful and proven Mahindra DiTEC engine
- Moldboard designed to suit required productivity & durability
- Hydraulic multi-function capability with two independent hydraulic pumps
- Torque converter type clutch & Power shuttle transmission

Customer Focus

- New equipment category tailored for small / medium roads & upgrade projects
- DiGiSense to put the customer in-charge of the machine
- ROPS/FOPS Canopy inline with international standards for Operator Safety
- Toll Free Customer Care number for providing quick & reliable effective service
- 60+ Strong dealer network for quick availability of genuine spare parts

Quality

- Best-in-class aggregates
- "Built by Mahindra" precision welded & high quality steel structures
- Grader Duty (G2) tyres for better traction and longer life in tough conditions
- Full blade visibility from Operator station for superior grading finish
- Ability to maintain consistent camber & layer thickness leading to improved road quality

Prosperity

- Freedom from labour intense & sub-optimal methods of spreading & grading
- Optimal productivity allows on-time project completion leading to higher revenue
- Right equipment to build good quality roads reducing maintenance cost
- Optional Dozer Blade & Ripper for additional productivity
- Lowest operating & maintenance cost allowing for higher profits

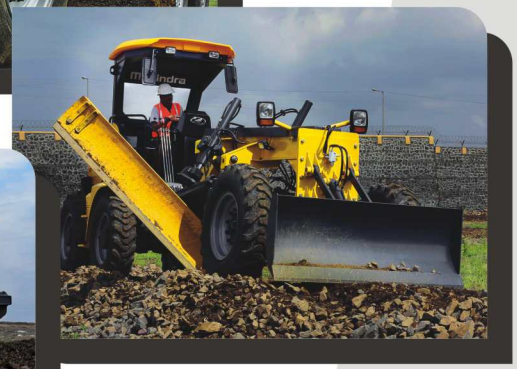

G75 Compared to Sub Optimal Methods

180% Speed of Work	30 Labours Equivalent
Lower Road Maintenance Cost	Higher Operator Comfort

G75 Compared to Conventional Motor Graders

50% Productivity	35% Product Cost
40% Operating Cost	0% Quality Compromise

Key Specifications

Mahindra DiTEC BSIII Engine
- 79.95 HP Power @ 2300 rpm
- Max. Speed: 38kmph
- Fuel Efficiency: 6 to 7 l/h*
- Productivity: 60 cum/hr*

Operator Comfort
- Spacious canopy
- Lockable storage
- Mobile charging
- Ergonomic Controls

Vehicle Weight
- GVW: 7740 kgs
- FAW: 2060 kgs
- RAW: 5680 kgs

Carraro Power Shuttle Transmission
- 4WD Transmission (4 speed)
- Steering mounted F/R switch
- Torque Converter Type Clutch

Precision Hydraulics
- 2 X 21 cc tandem gear pump
- 60 lpm, 180 bar pressure
- 10 micron return line filter
- Load holding check valve

Wheels
- All 6 wheels of equal size
- Tyres: 13X24 12 PR
- G2 Grader Duty Tyres

Moldboard Dimensions (mm)
- 2600 + (2 X 200 mm Extension) (W) X 516 (H) X 16 (T)
- Max. Blade Cutting Angle: 25.6°
- Max. Blade Rotation Angle: 30°
- Blade Side Shift: 513 mm
- Cutting Edge: 16 mm (T), 3 Parts
- Material: High Strength Steel

Major Dimensions
- Turning Radius: 10 meter

Optional Fitments:
- 1.98 meter Dozer
- 5 tyne Ripper

Refill Capacities
- Hydraulic Tank: 50 Liters @ 2000 hr
- Fuel Tank: 85 Liters
- Engine Coolant: 17 Liters @ 1000 hr
- Engine Oil: 13.5 Liters @ 500 hr
- Transmission : 16 Liters @ 1000 hr
- Middle Axle / Rear Axle (Differential): 14.5 Liters @ 1500 hr
- Middle Axle / Rear Axle (Final Drive): 1.5 Liters (on each side) @ 1500 hr

Note: *Depending on site condition and operator skill

Sales and Service Support

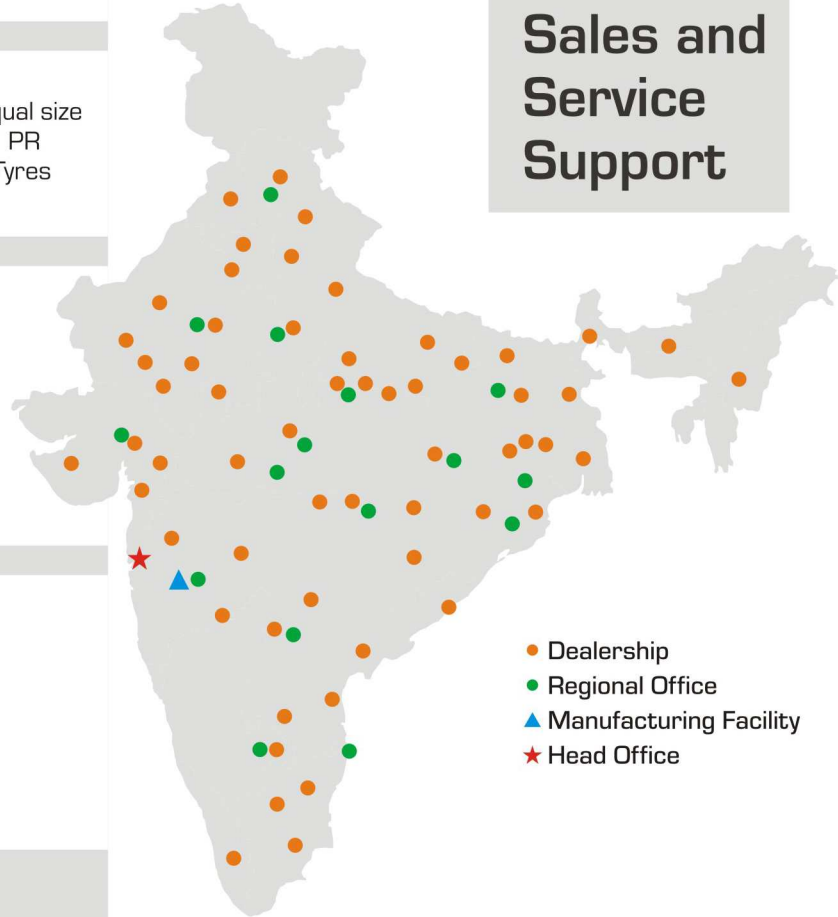

Mahindra Construction Equipment GENUINE SERVICE

Mahindra Construction Equipment LUBRICANTS

Mahindra Construction Equipment ATTACHMENTS

Mahindra Construction Equipment GENUINE PARTS

Mahindra with you hamesha

Dimensions Drawing

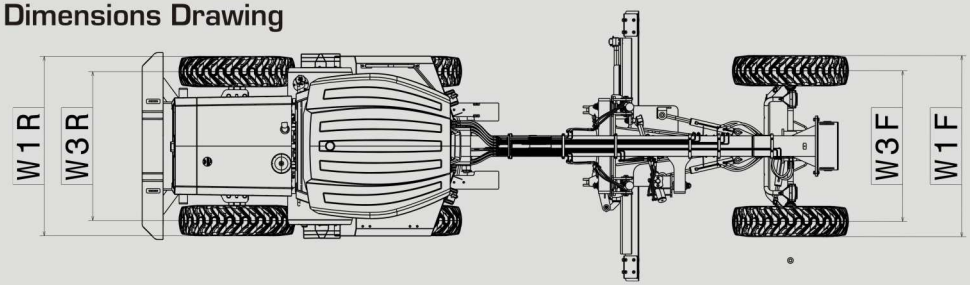

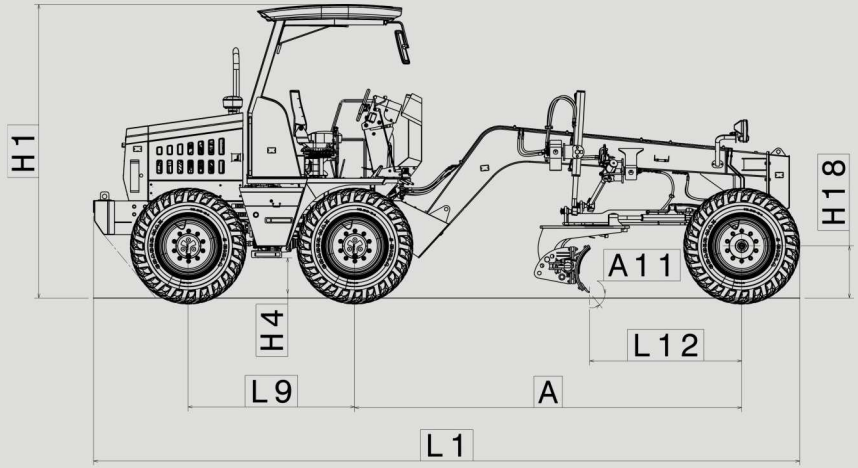

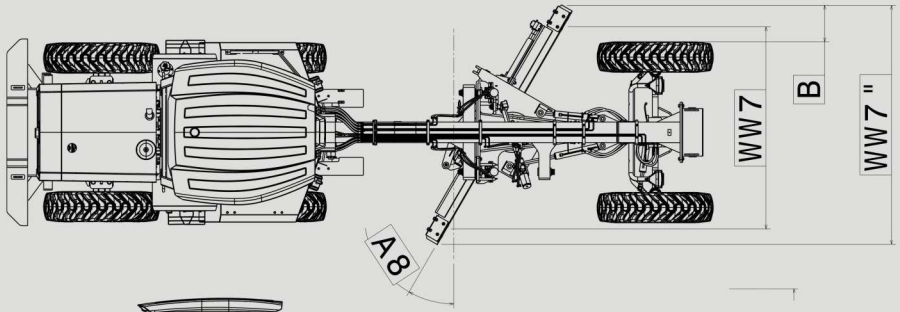

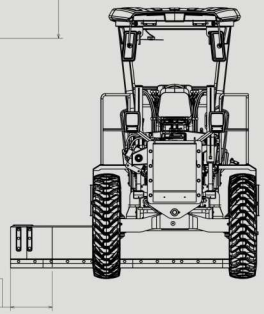

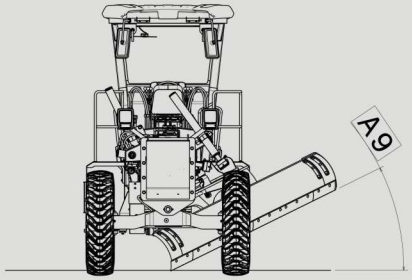

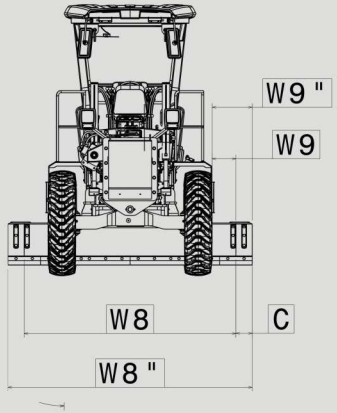

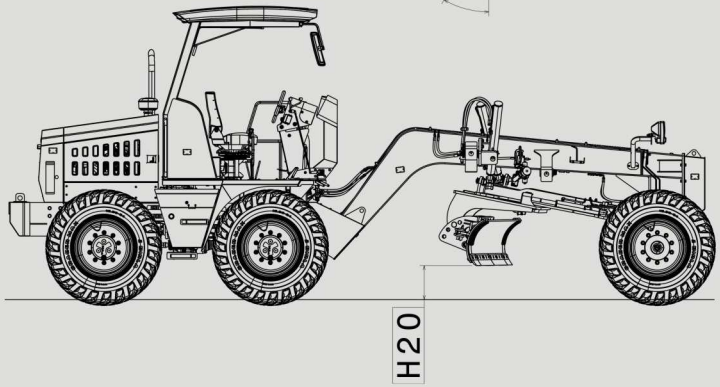

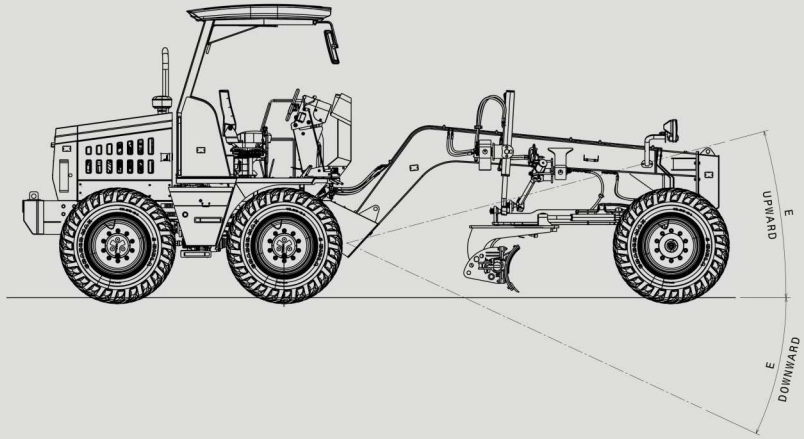

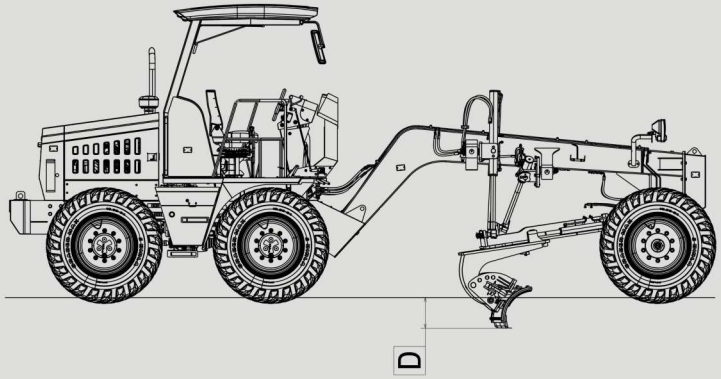

Tecnical Specifications

Engine	
Model	Mahindra Ditec 4805 IA BSIII CEV
Form of air aspiration	Turbocharged
No of cylinders	4
Bore	96 mm.
Stroke	122 mm.
Displacement	3532 cc.
High idle rpm	2500 rpm.
Low ideal rpm	850 rpm.
Cooling system	Water cooled
Type of fuel	Diesel
Gross horse power	58.8 kW (79.95 HP) @ 2300 rpm.
Peak gross torque	306 Nm@1300-1700 rpm.
Electrical system voltage	12 V

Operating Specification		
Gross vehicle weight	7740 kg.	
FAW	2060 kg.	
RAW	5680 kg.	
Speed @ gear (kmph)	Forward	Reverse
1st	4.5 to 6.0	6.0 to 7.5
2nd	7.5 to 9.0	9.0 to 10.5
3rd	17.5 to 19.5	
4th	34.0 to 38.0	
Turning redius outside tyres	R1	10 m
Steering angle inner wheel		45°
Steering angle outer wheel		32°

Moldboard		
Base length of MB2600 mm.		
Thickness of Moldboard16 mm.		
Blade height	H19	516 mm.

Cutting Edge (blade)		
Standard Length of Cutting Edge	W8	2600 mm. (3 Piece cutting edge) (1100 + 1100 + 400)
Length of Cutting Edge with Side Extensions	W8"	3000 mm. (4 Piece cutting edge) (1100+1100+400+400)
Width of Cutting Edge		152 mm.
Thickness of Cutting Edge		16 mm.

End Bit		
Width	C	200 mm.
Thickness		16 mm.
Blade pull force (kgs)		3500 max
Blade down force (kgs)		3500 max

Dimensions (in mm)		
Distance-between middle & rear axle	L9	1850 mm.
Distance-between front & middle axle	A	4300 mm.
Wheel base	L3	5225 mm.
Distance - Front axle to moldboard - Blade base	L12	1691 mm.
Transport length	L1	7835 mm.
Ground clearance below front axle beam	H18	528 mm.
Minimum ground clearance	H4	467 mm.
Max vehicle height	H1	3290 mm.
Track width - Front	W3F	1674 mm.
Track width - Rear	W3R	1654 mm.
Width- Outside front tires	W1F	2021 mm.
Width- Outside rear tires	W1R	2001 mm.
Width - Transport (without blade extensions)	WW7	2327 mm.
Width - Transport (with blade extensions)	WW7"	2667 mm.
Distance outside front tyres and blade (without blade extensions)	B	153 mm.
Distance outside front tyres and blade (with blade extensions)	B"	323 mm.

Blade Range			
Circle rotation angle	A8	30° from transverse of Vehicle	
Circle drive	Hydraulic cylinders with no end mechanical stoppers		
Blade side shift (LH/RH)	W15	513 mm.	
Blade tilt angle/Bank cut angle (LH/RH) at ground level measured on blade	A9	(20°/15°)	
Blade tilt angle/Bank cut angle (LH/RH) at ground level measured on drawbar	A9"	(25.6°/20°)	
Blade pitch angle at ground line	A11	Forward Backward	40° 15°
Blade without extension outside front tyres with blade positioned parallel to wheel axis	W9	289.5 mm.	
Blade outside front tyres with blade positioned parallel to wheel axis	W9"	489.5 mm.	
Blade lift at normal blade pitch angle	H20	400 mm.	
Max Blade cut depth below ground at nominal blade angle	D	300 mm.	
Attachment oscillation angle	E	Upward Downward	15° 15°

Transmission		
Model Name		Carraro 4WD Transmission
Gear Ratios		Forward / Reverse
	1st	5.603 / 4.643
	2nd	3.481 / 2.884
	3rd	1.585 / 1.313
	4th	0.793 / 0.657
Torque converter ratio		2.64

Front Axle	
Type	None Driven, Steerable, Central Pivoted
Loading Capacity (TON)	8

Middle Axle	
Type	Driven, Non-Steerable, Rigid
Reduction ratio, Differential	2.75
Reduction wheel end	6.932
Total reduction ratio	19.04

Rear Axle	
Type	Driven, Non-Steerable, Central Pivoted
Reduction ratio, Differential	2.75
Reduction wheel end	6.932
Total reduction ratio	19.04

Tyres & Wheels	
Tyre Spec	13 X 24 - 12 PR
SLR	600
DLR	603
Wheel Rim size	9 X 24

Tyre Pressure (mrf)	
Front / Middle / Rear	44 psi

Brakes	
Service brake type	Foot operated hydraulically actuated oil immersed disc in middle axle
Parking brake type	Hand operated, mechanically actuated oil immersed disc in middle axle

Steering	
Type	Power Steering
Steering valve	Load sensing with priority valve 200 cc
Other feature	Emergency steering in case of pump failure

Electrical	
System voltage	12 V
Battery rating	12 V, 100 AH
Alternator type	12 V, 90 Amp

Hydraulics	
System	Open centre
Pump type	Fixed displacement Tandem Gear Pump, 21 cc + 21 cc
Max pump flow rate	46 Liters @ 2300 rpm
Max working pressure	180 bar
Refill qty	50 liters
System capacity	60 liters
Other feature	Load holding with pressure relief valves for lift and sensing cylinder

Service Capacities	
Hydraulic tank	50 Liters @ 2000 hrs
Fuel tank	85 Liters
Engine coolant	17 Liters @ 1000 hrs
Engine oil	13.5 Liters @ 500 hrs
Transmission	16 Liters @ 1000 hrs
Middle Axle or Rear Axle (Differential)	14.5 Liters @ 1500 hrs for each axle
Middle Axle or Rear Axle (Final Drive)	1.5 Liters (on each wheel end) @ 1500 hrs

Optional Fitments	
Ripper	5 Tyne
Dozer	1.98 meter Width

Manufacturing Facility

Technical specifications, features are subjected to change without prior notice. Image used are for representative purpose only. Accessories shown may not be a part of the standard product. Actual colours may very. E&O.E.^Standard exclusions apply. For further details on the warranty, please contact your dealer. *According to government approved independent agency, under manufacturer standard PER/VEH/21 certified at 1450 RPM.#When compared to a standard excavation cycle. ##Value measured under specific measuring condition.

ROADMASTER G75 / ENG / MAY-18

Note: Technical specifications, features are subject to change without prior notice. Images used are for representative purposes only. Accessories shown may not be a part of the standard product. Actual colors may vary E &O.E. All dimensions are variable within +/- 5%

Mahindra Construction Equipment

Mahindra & Mahindra Ltd. I CE Business I Gate No.2 I 1st Floor I Powerol Building I Akurli Road I Kandivali (E) I Mumbai - 400 101.
Toll Free Helpline: 1800 209 6006 I Website: www.mahindraconstructionequipment.com I E-mail: mce.marketing@mahindra.com